Receptacle with flange

Series GS

Item number: GS321-24-A25SN-EAA

Packing unit: 1

Mechanical properties

Size:	24
Contact type:	Socket
Coding options:	4
Number of contacts, size 16:	25
Shell material:	Aluminum alloy
Surface treatment:	Zinc
Type of surface:	passivated
Thickness of surface treatment:	12-15µ
Surface colour:	black
Corrosion resistance (h):	200
Operation temperature:	-55°C - +90°C
Temperature shock:	-55°C - +125°C
Conductivity (MΩ):	≤ 0.5
EMI:	Yes
Coupling-torque to lock (Nm):	max. 6.5
Coupling-torque to open (Nm):	min. 2.0

Thermal properties

Material contact insert:	Ethylene acrylate GXF
Operating temperature:	-55°C - +150°C
Fire protection class DIN EN 45545-2:	R23/HL3

Chrummacherstr. 3 CH-8954 Geroldswil
info@gimota.ch
+41 44 749 30 10
+41 44 749 30 15

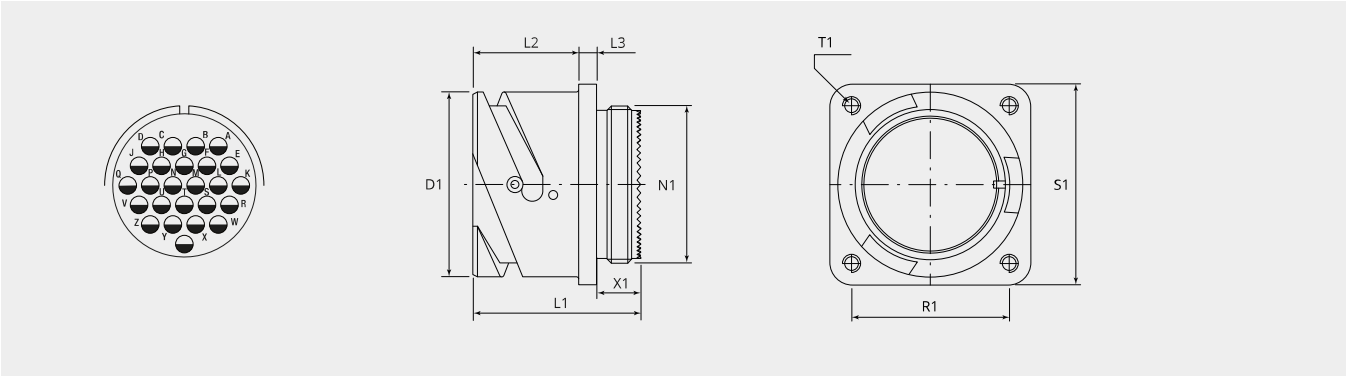

Dimensional drawing

D1 (Ø):	41.0
L1 (mm):	38.8
L2 (mm):	23.1
L3 (mm):	4.0
N1:	1 3/8"-18 UNEF 2A
T1 (mm):	3.7
X1 (mm):	9.0
S1 (mm):	44.5
R1 (mm):	35.0

Electrical properties

Operating voltage DC (V):	250
Operating voltage AC (V):	200
Test voltage AC (V):	1000
Insulation resistance (Ω m):	≥ 5000
Insulation creepage distance (mm):	≥ 1.6
Voltage class:	MIL-DTL-5015

Electrical properties contacts

Size 16 - nominal current [continuous] (A):	13
Size 16 - maximal current [short-term] (A):	22
Size 16 - test current (A):	20

Please contact your Gimota partner for other shell materials, surface coatings or contact insert materials.

Voltage classes tested acc. MIL-DTL-5015
Power transmission verification acc. VG95234 / 2 test 5.10.1 and VG95210 / 37
Corrosion resistance tested acc. MIL 1344A Test 101.1
Temperature shock tested acc. MIL 202F, 107G Method
Electrical conductivity acc. MIL 1344A, Test 3007

Complementary products:

Counterpart:

GS60-24-A25PN-EAA
Plug with bayonet coupling nut

GS601-24-A25PN-EAA
Plug with bayonet coupling nut, for EMI applications

GS602-24-A25PN-EAA
Plug with rubber coated coupling nut

GS604-24-A25PN-EAA
Plug with rubber coated coupling nut, for EMI applications

Chrummacherstr. 3 CH-8954 Geroldswil
info@gimota.ch
+41 44 749 30 10
+41 44 749 30 15

Backshell:

BEN24-AA
90° elbow backshell

BEN24-M5B-AA
90° elbow backshell with internal metric thread

BSH24-AA
Backshell with groove for heatshrinkable shapes

BSL24-AA
Backshell straight, long

BSN24-M5B-AA
Backshell straight with internal metric thread

BSR24-18-AA
Reducer backshell

BST24-AA
Termination back shell typ R for grommet

ET-24-07-AA
EMI adapter with cone ring, for heatshrinkable shape

Cable termination:

10-350349K-2432
Synthetic cable clamp

Contacts:

10-40556-05AU
Socket contact size 16, 0.25 - 0.5mm²

10-40556-075AU
Socket contact size 16, 0.75mm²

10-40556-20-1AU
Socket contact size 16, 1.5mm²

10-40556AU
Socket contact size 16, 1.0mm²

Filler plugs:

10-101033-121
Filler plug, size 16/16S

Protection cap:

PR24-AA
Metallic protection cap for bayonet receptacles (GB,GR & GS)

PR24-D
Plastic protection cap to bayonet receptacles (GB, GR &GS)

Accessory:

10-40450-24
Sealing gasket for receptacle, front panel mount

10-40450-24S
Sealing gasket for receptacle, front panel mount, conductive

10-40451-24
Sealing gasket for receptacle, rear panel mount

10-40451-24S
Sealing gasket for receptacle, rear panel mount, conductive