Receptacle with threaded coupling, front panel mount

Series GT

Item number: GT210-32-31SN-EAC

Packing unit: 1

Mechanical properties

Size:	32
Contact type:	Socket
Coding options:	4
Number of contacts, size 16:	31
Shell material:	Aluminum alloy
Surface treatment:	Epoxy-polyurethane
Type of surface:	varnished
Thickness of surface treatment:	13-16µ
Surface colour:	black
Corrosion resistance (h):	500
Operation temperature:	-55°C - +125°C
Temperature shock:	-55°C - +125°C
Conductivity (MΩ):	non conductive
EMI:	No
Coupling-torque to lock (Nm):	max. 8.0
Coupling-torque to open (Nm):	min. 3.6

Thermal properties

Material contact insert:	Ethylene acrylate GXF
Operating temperature:	-55°C - +150°C
Fire protection class DIN EN 45545-2:	R23/HL3

Chrummacherstr. 3 CH-8954 Geroldswil
info@gimota.ch
+41 44 749 30 10
+41 44 749 30 15

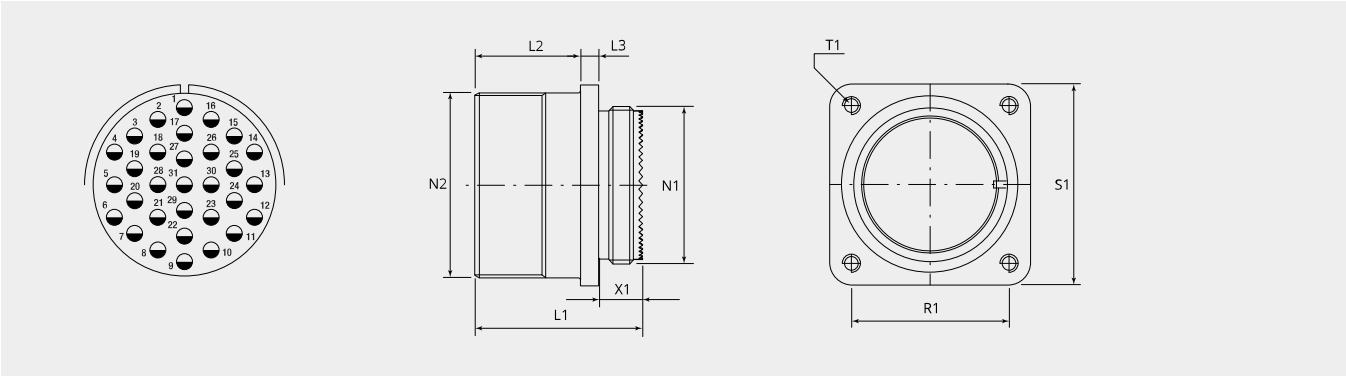

Dimensional drawing

D1 (Ø):	53.4
L1 (mm):	39.5
L2 (mm):	24.1
L3 (mm):	4.0
N1:	1 7/8"-16 UN 2A
N2:	2"-18 UN 2A
T1 (mm):	4.3
X1 (mm):	10.5
S1 (mm):	57.0
R1 (mm):	44.5

Electrical properties

Operating voltage AC (V):	130/250
Insulation resistance (Ω m):	≥ 5000
Voltage class:	SEV-EN60998-1
Contact numbers:	All
Operating voltage DC (V):	700
Operating voltage AC (V):	500
Test voltage AC (V):	2000
Insulation resistance (Ω m):	≥ 5000
Insulation creepage distance (mm):	≥ 3.2
Voltage class:	MIL-DTL-5015

Chrummacherstr. 3 CH-8954 Geroldswil
info@gimota.ch
+41 44 749 30 10
+41 44 749 30 15

Electrical properties contacts

Size 16 - nominal current [continuous] (A):	13
Size 16 - maximal current [short-term] (A):	22
Size 16 - test current (A):	20

Please contact your Gimota partner for other shell materials, surface coatings or contact insert materials.

Voltage classes tested acc. MIL-DTL-5015
Power transmission verification acc. VG95234 / 2 test 5.10.1 and VG95210 / 37
Corrosion resistance tested acc. MIL 1344A Test 101.1
Temperature shock tested acc. MIL 202F, 107G Method
Electrical conductivity acc. MIL 1344A, Test 3007

Chrummacherstr. 3 CH-8954
Geroldswil
info@gimota.ch
+41 44 749 30 10
+41 44 749 30 15